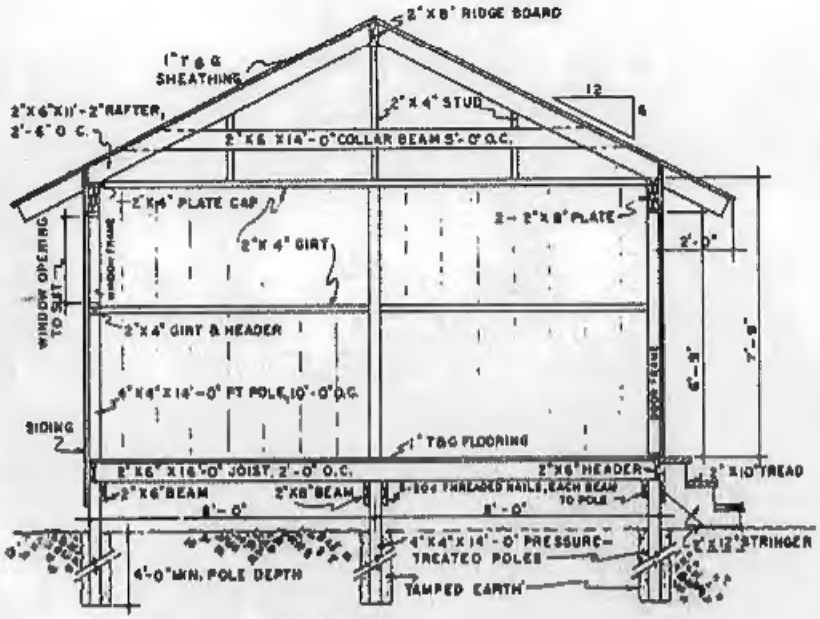

SECTION A–A

0 1 2 3 4 FT.

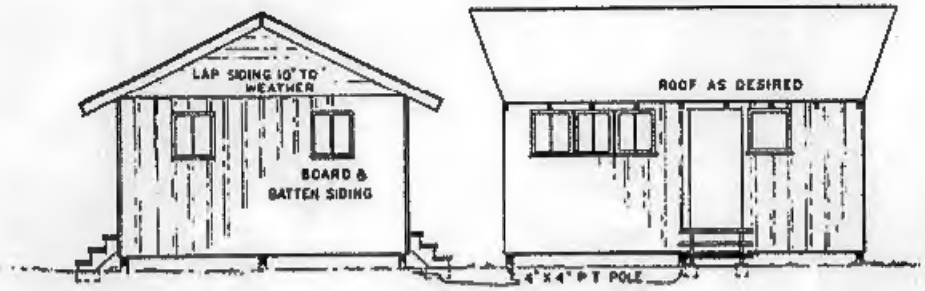

END ELEVATION FRONT ELEVATION

0 2 4 6 8 FT.

WINDOW SCHEDULE

WINDOW	UNIT SIZE*	NO. OF UNITS
A	28" x 28"	3
B		
C		
D		
E		
F		

*ALL WINDOW UNIT SIZES ARE APPROXIMATE. UNITS ARE INSWINGING & ARE HINGED AT THE TOP. OTHER STYLES OR SIZES MAY BE SUBSTITUTED

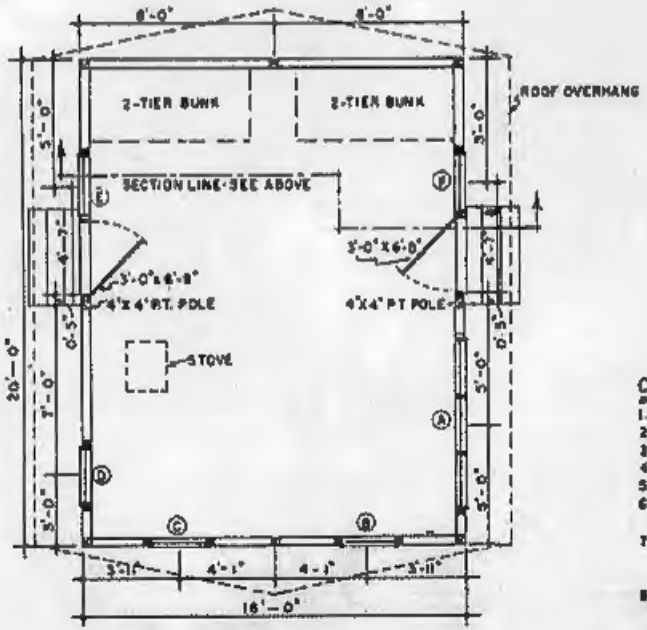

PLAN

0 2 4 6 FT.

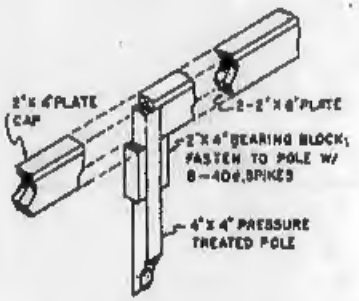

PLATE-POLE DETAIL

NO SCALE

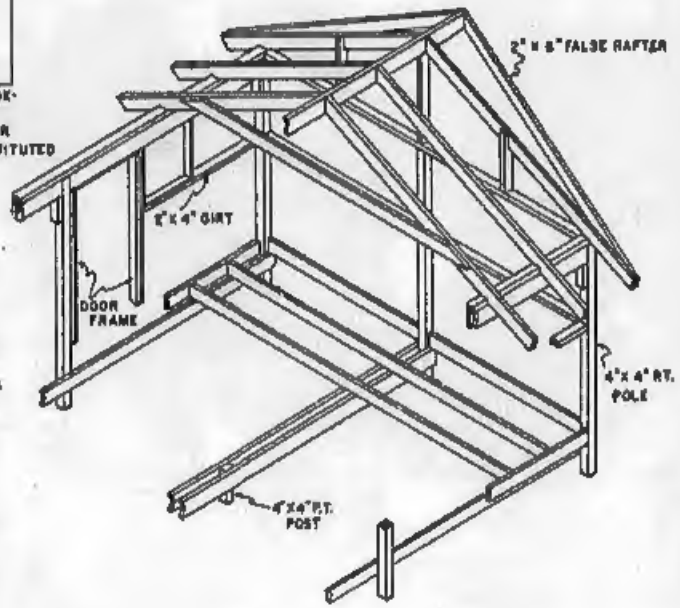

FRAMING PERSPECTIVE

0 2 4 6 FT.

BASED ON UNIV. OF MASS. PLAN MC-5610

CONSTRUCTION NOTES

1. THIS DESIGN IS BASED ON THE USE OF ROUGH-SAWN EASTERN HEMLOCK
2. DESIGN ROOF LOAD 40LBS. PER SQ. FT.
3. DESIGN FLOOR LOAD 40LBS PER SQ. FT.
4. LENGTHS OF POLES ARE DEPENDENT ON SLOPE OF BUILDING SITE
5. ALL FRAMING NAILS SHOULD BE HARDENED AND THREADED.
6. ALL WOOD IN CONTACT WITH EARTH SHOULD BE PRESSURE TREATED WITH A PRESERVATIVE.
7. ROUGH-SAWN BOARD & BATTEN SIDING WITH 10" TO 12" WIDE BOARDS & 2" TO 3" WIDE BATTENS ON THE BETWEEN-BOARD CRACKS IS ATTRACTIVE. OTHER SIDING MATERIALS MAY BE USED IF DESIRED.
8. INTERIOR FINISH IS LEFT TO THE BUILDERS DISCRETION.

COOPERATIVE EXTENSION WORK IN AGRICULTURE AND HOME ECONOMICS
STATE OF TENNESSEE
UNIVERSITY OF TENNESSEE
AGRICULTURAL ENGINEERING DEPARTMENT
AND
UNITED STATES DEPARTMENT OF AGRICULTURE COOPERATING

16' x 20' CABIN

MASS. '66 | EX. 6004 | SHEET 1 OF 1